DIAGRAMMA DELLE PORTATE (t)
CAPACITY DIAGRAM (t)
TRAGLASTDIAGRAMM (t)
LASTENDIAGRAM (t)
TABLEAU DES CHARGES (t)
DIAGRAMA DE LAS CARGAS (t)

JMG
MILANO - ITALY

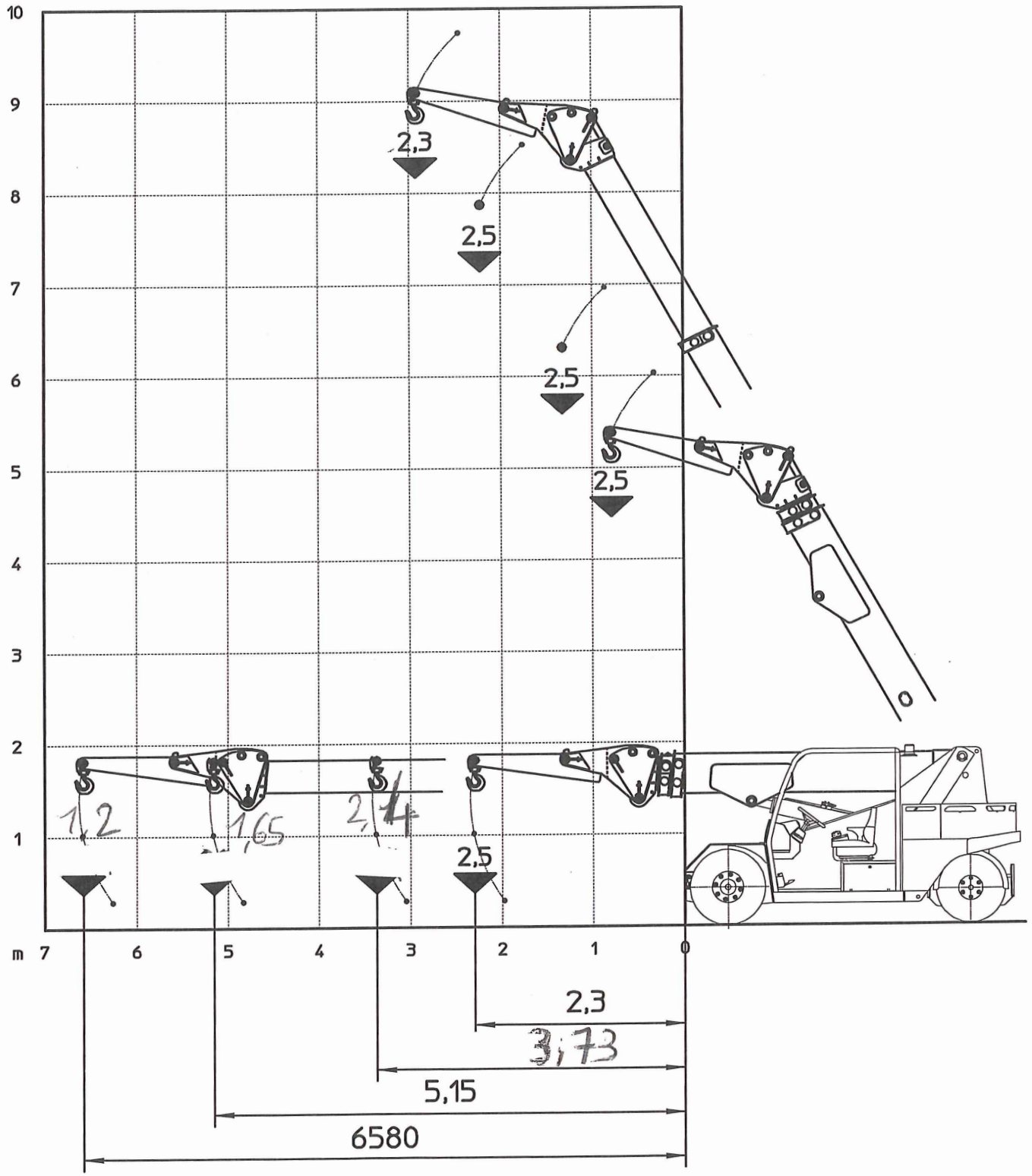

MC 1905

COD. 090-DIA-00208 00 H1:60

DIAGRAMMA DELLE PORTATE (t)
CAPACITY DIAGRAM (t)
TRAGLASTDIAGRAMM (t)
LASTENDIAGRAM (t)
TABLEAU DES CHARGES (t)
DIAGRAMA DE LAS CARGAS (t)

JMG
MILANO - ITALY

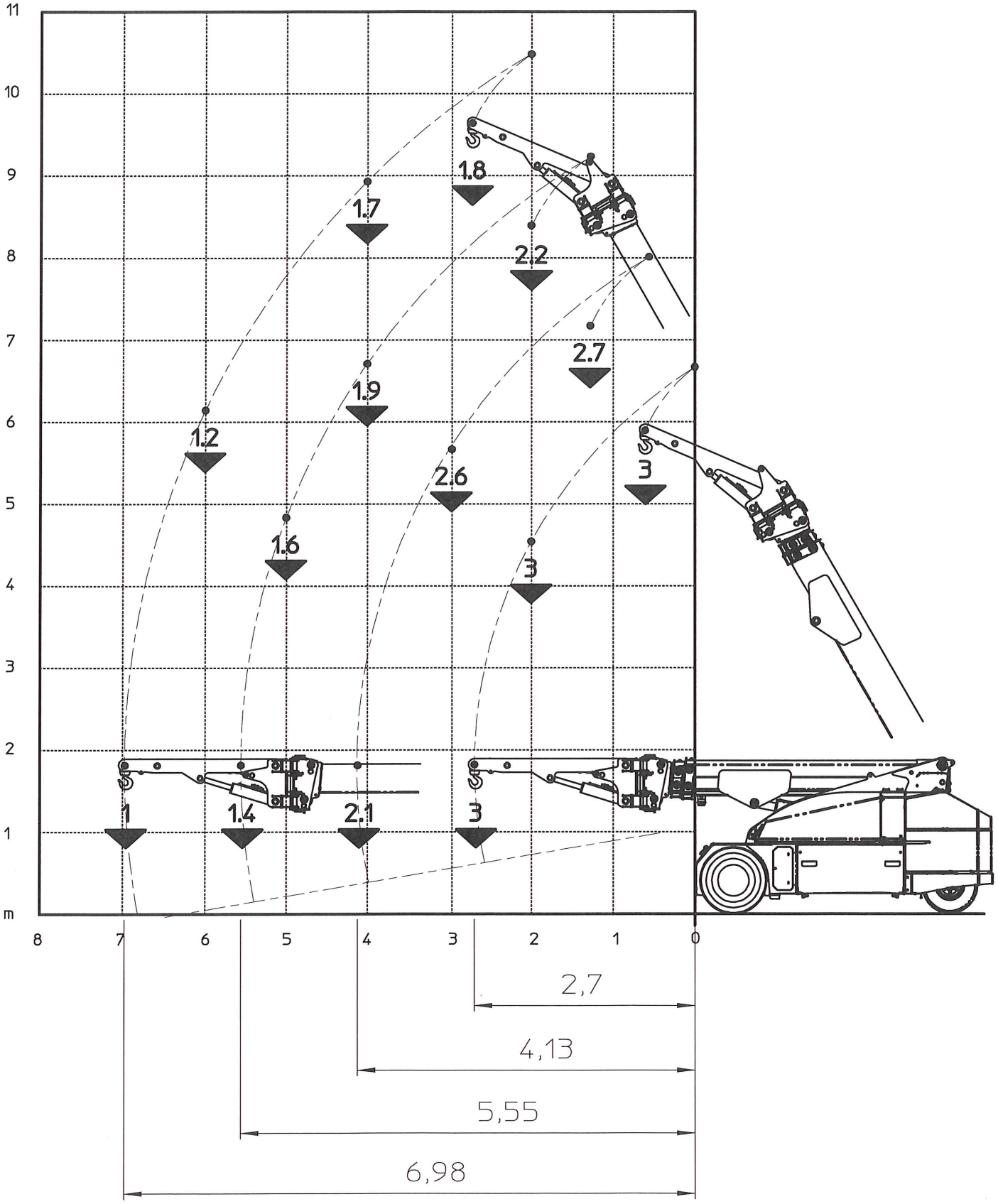

MC 90S

090-DIA-00954 H1:65

DIAGRAMMA DELLE PORTATE (t)
CAPACITY DIAGRAM (t)
TRAGLASTDIAGRAMM (t)
LASTENDIAGRAM (t)
TABLEAU DES CHARGES (t)
DIAGRAMA DE LAS CARGAS (t)

JMG
MILANO - ITALY

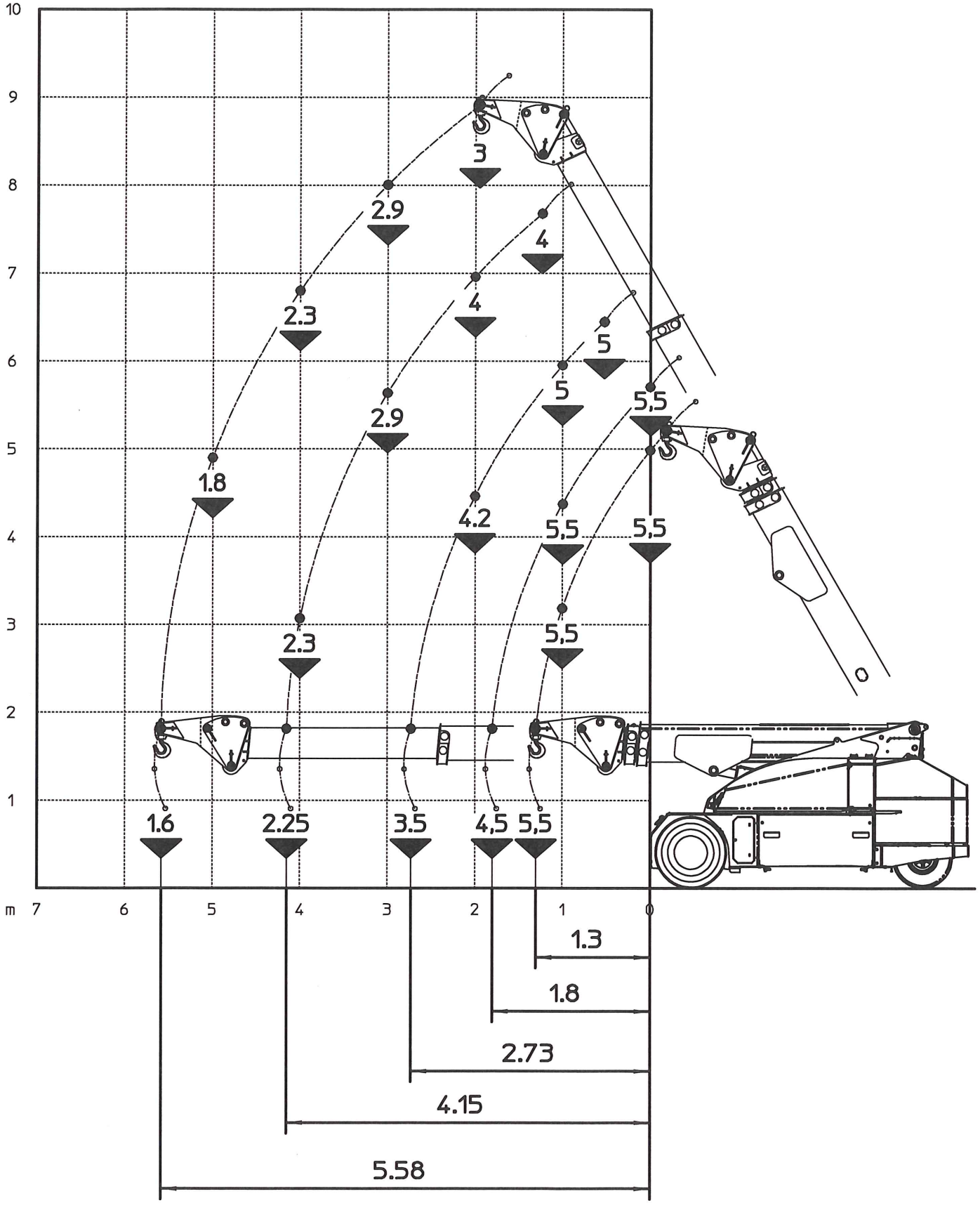

MC 90S

COD. 090-DIA-00963 H1:75